RADIALL® MULTICONTACT CONNECTORS	TECHNICAL DATA SHEET	620 176 010

Series		Issue:	Page
NSX	SIZE 8 FRONT RELEASE. FRONT REMOVABLE TIN LEAD PC POST PIN QUADRAX CONTACT	07 MARCH 02	1 / 1

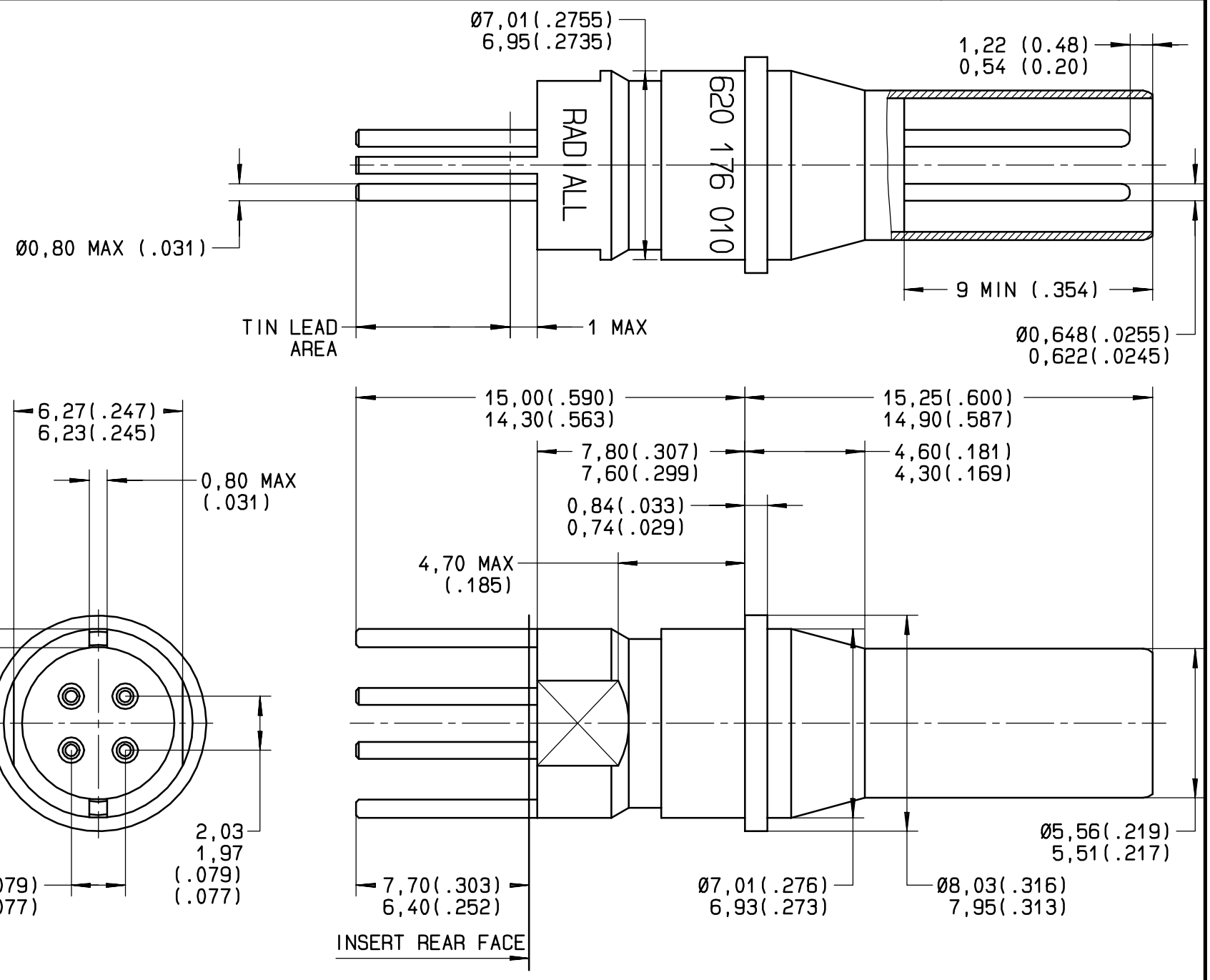

RECOMMENDED PC DRILL PATTERN

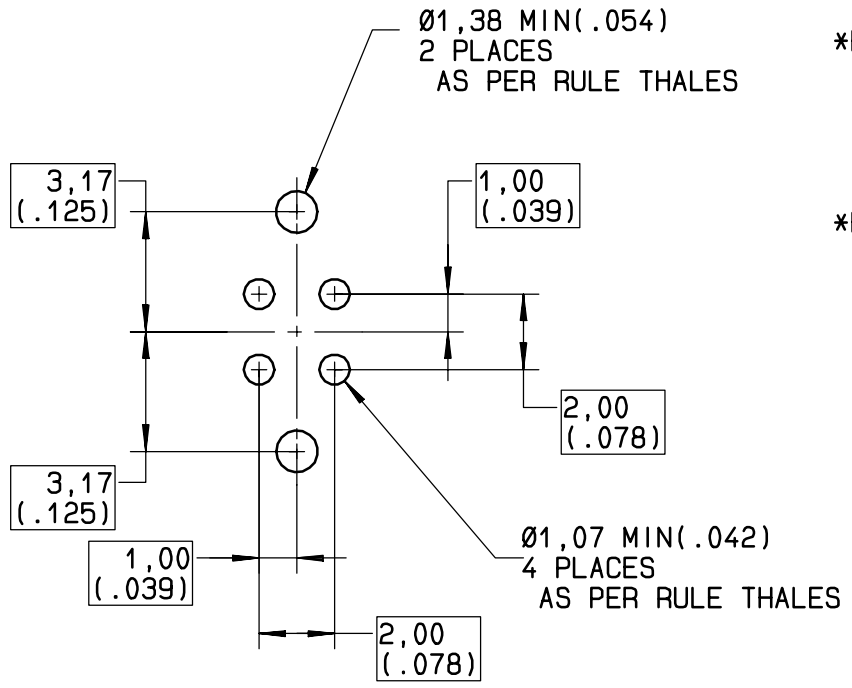

*MATERIAL:
- OUTER CONTACT: BRASS PER QQ-B-626
- CENTER CONTACT: BODY LEADED NICKEL COPPER (C97)
- DIELECTRICS: FPTE PER ASTM-D-1710 OR EQUIVALENT

*FINISH:
- ALL METAL PARTS:
  PLATING .00005 INCH OF GOLD PER MIL-G-45204 TYPE I OR II GRADE C OR D CLASS 1 OVER NICKEL PER QQ-N-290 - PWD SOLDER CONTACT AREA WICH IS TIN LEADED PER QQ-S-571

*EXTRACTION TOOL:
- RADIALL P/N: 282 549 009

CREATION

PEN: M010004041A

NOM: COUTHON

DATE: 05 FEV 2002

APPR.: B GOMBERT

Issue	Revisions	Name	Approved
07 MAR 02	UPDATED	COUTHON	.
FEB 08,02	CHANGED SITE FROM MARKING RADIALL	COUTHON	GOMBERT

This information is given as an indication.In the continual goal to improve our products,we reserve the right to make any modifications judged necessary.